# Section 9

06-52

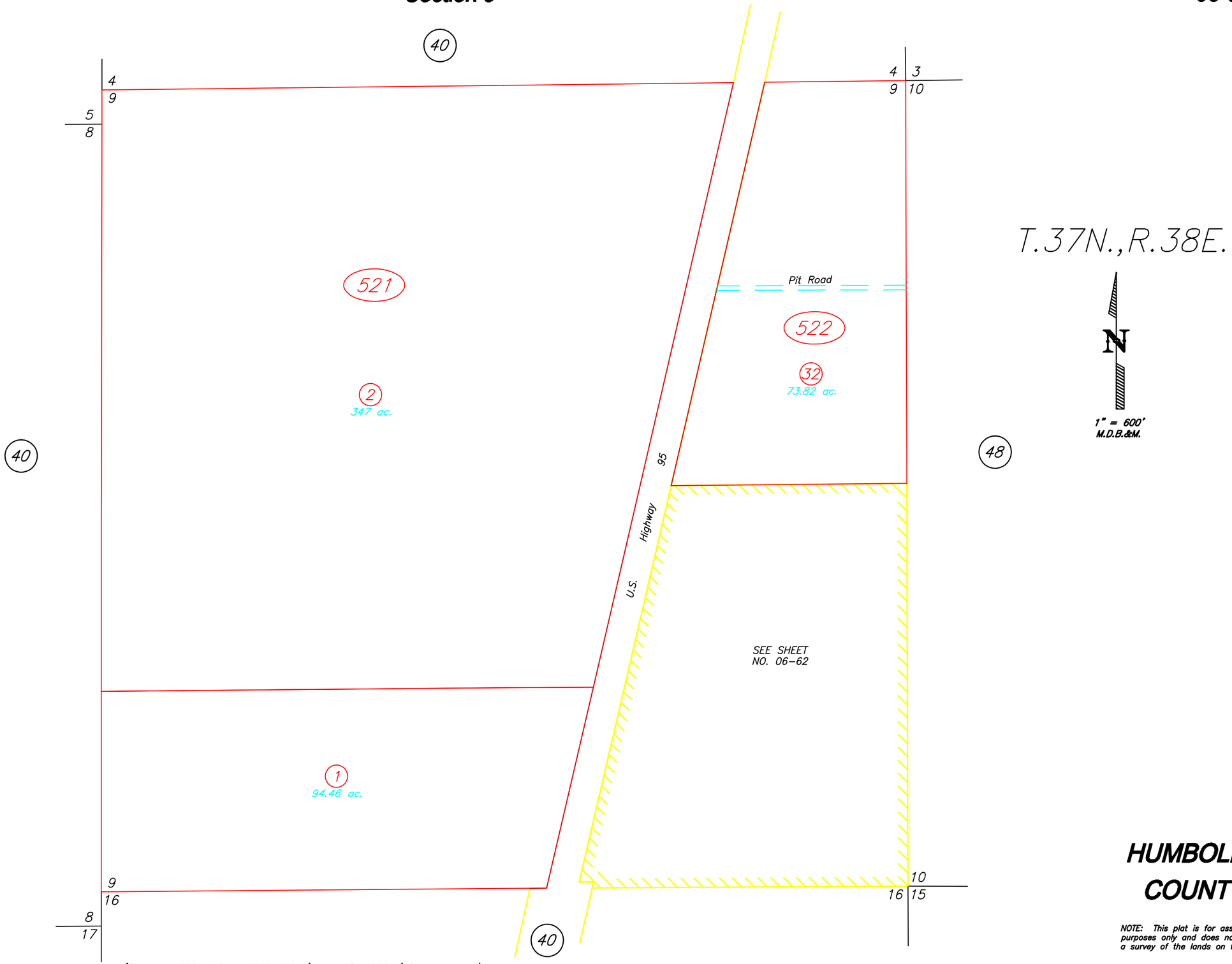


(File No. 1996-425 & 1996-426 / Jan. 23, 1996 / P.M. J.H.M. III)

**HUMBOLDT COUNTY**

NOTE: This plat is for assessment purposes only and does not represent a survey of the lands on this plat.

HUMBOLDT COUNTY ASSESSOR'S OFFICE
WINNEMUCCA, NEVADA 89445

5/6/2010 12:47:40 PM