Section 16

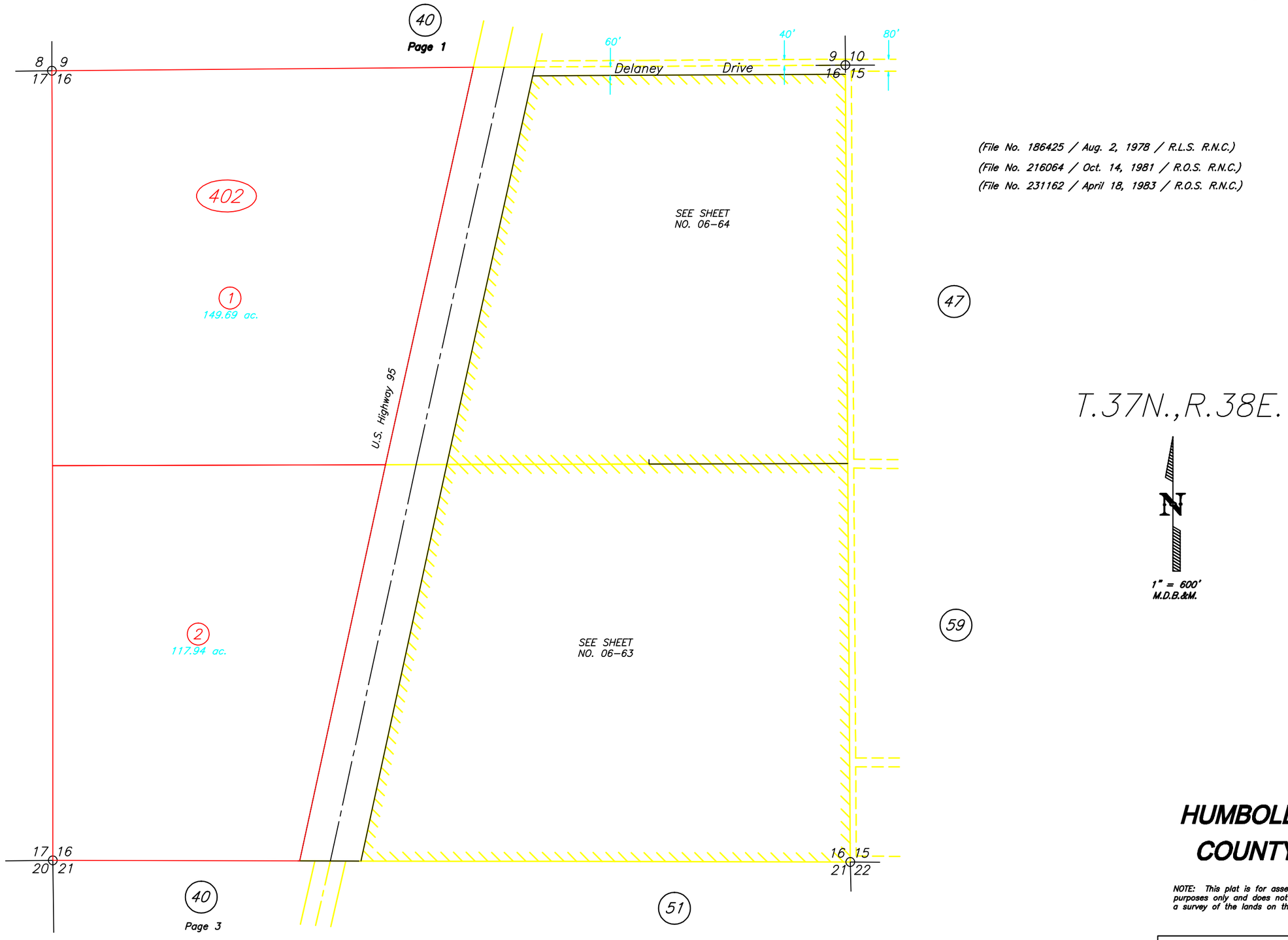

(File No. 186425 / Aug. 2, 1978 / R.L.S. R.N.C.)
(File No. 216064 / Oct. 14, 1981 / R.O.S. R.N.C.)
(File No. 231162 / April 18, 1983 / R.O.S. R.N.C.)

T.37N.,R.38E.

1" = 600'
M.D.B.&M.

HUMBOLDT COUNTY

NOTE: This plat is for assessment purposes only and does not represent a survey of the lands on this plat.

HUMBOLDT COUNTY ASSESSOR'S OFFICE
WINNEMUCCA, NEVADA 89445